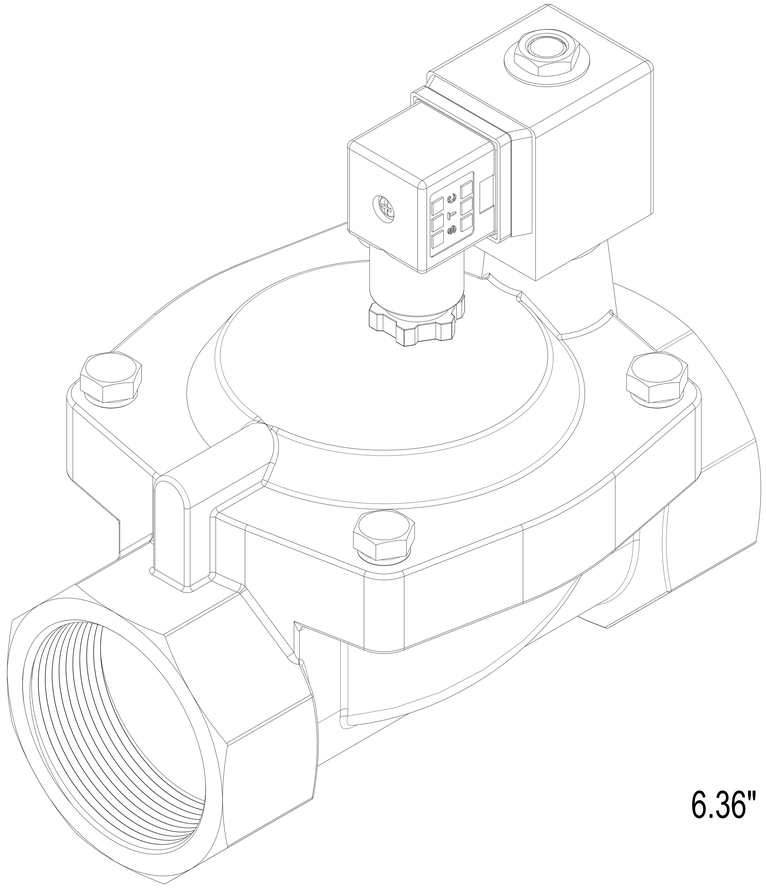

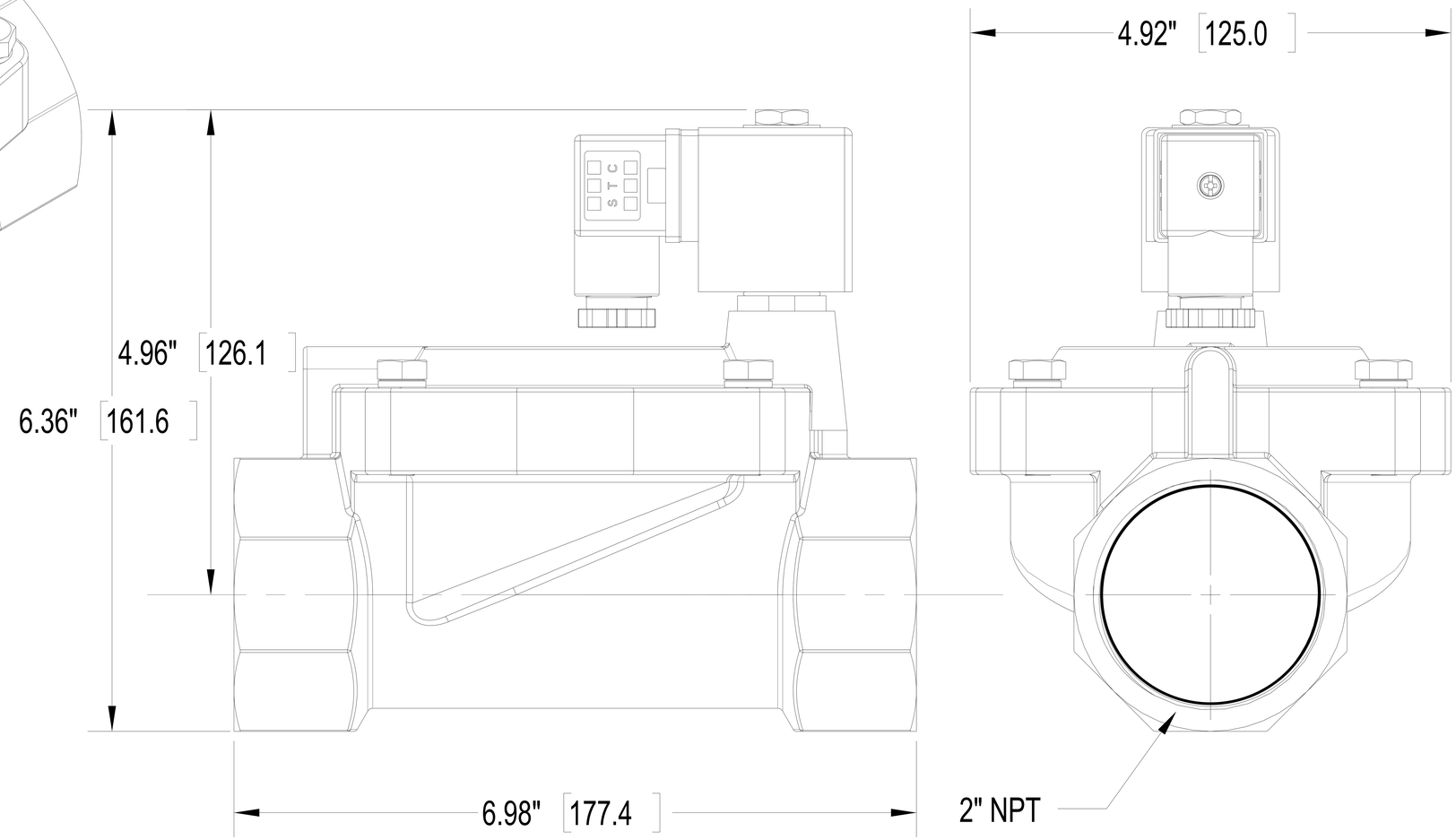

STC™

StcValve.com

Part Number:

2D500-2

Brass, Anti-Hammering, Slow Closing Pilot, Solenoid Valve, 2" NPT

11x8.5

aet

Information in the drawing is provided for reference only. Dimensions are in inches [mm], U.N.O.

Scale 1:2

10/3/2018

SHEET 1 OF 1